Electrocoating of carbon fibres with polymers: 2. Electrocopolymerization of monofunctional monomers

S. Shkolnik*
Department of Applied Chemistry, Soreq Nuclear Research Centre, Yavne 70600, Israel

and H. Höcker
Deutsches Wollforschungsinstitut, Veltmanplatz 8, D-5100 Aachen, Germany
(Received 16 November 1990; revised 6 January 1991; accepted 2 April 1991)

The electropolymerization of methyl methacrylate and methyl acrylate was investigated. The reactivity ratios of the monomers in this electrochemically initiated reaction were calculated and found to be equal to 0.33 and 0.89, respectively. The composition of the monomer–electrolyte solution and the parameters of the electrocopolymerization–coating process, which provides formation of thin (submicrometre) even coatings on carbon fibres (CF), were found. Composites from CF coated with the methyl methacrylate–methyl acrylate copolymer showed an improved strain energy release rate (40–200%) and interlaminar shear strength (up to 20%) in comparison with specimens from untreated CF. A pot-life of more than 1 month for the monomer–electrolyte solution was achieved.

(Keywords: electrocopolymerization; carbon fibres; methyl methacrylate; methyl acrylate; copolymer; strain energy release rate; interlaminar shear strength)

INTRODUCTION

The electrochemical polymerization of hydroxyalkyl methacrylates and aniline on carbon fibres (CF) was described recently[1]. These polymers were selected as coatings owing to their potential to increase the interaction between the epoxy matrix and reinforcing CF in composite materials. Specimens prepared from CF with electropolymerized polyaniline (PAn) and poly(hydroxypropyl methacrylate) (PHPMA) interlayers were tested for impact strength (*IS*) according to ASTM D256 (Charpy method) and interlaminar shear strength (*ILSS*), described below. The results showed a small increase in the *IS* (6–14%) and a decrease in *ILSS* (~10%) of composites reinforced with PAn-coated CF. The secondary amine groups are likely to improve the adhesion between the fibre and the epoxy matrix. However, enhancement of the *ILSS* (8–10%) was found only when the coated tows were subjected to post-polymerization treatment in alkaline solution. In the polymerization of aniline, protonated amine groups are formed, which lack an available site for the interaction with the matrix. The deprotonation of the amine group during such treatment enables the formation of a chemical interaction between the CF and the epoxy matrix. The lack of improvement in the *IS* of the composites can be attributed to the brittleness of this polymer. This observation confirms the assumption that only a ductile interlayer can work as a 'shock absorber' and, consequently, increase the *IS*.

Specimens prepared from PHPMA-coated CF did not show any significant change in their *IS*. For example, when coated CF/PHPMA (19.7% weight gain, which is equivalent to 0.5 μm layer thickness) samples were tested, the improvement in *IS* was only 2–4%. Thus, neither can PHPMA serve as an elastic buffer between the two rigid components of the composite, CF and epoxy resin.

The fractured surface of uncoated as well as coated CF/PHPMA and CF/PAn specimens was examined by SEM (*Figure 1*). The pictures reveal that, in the case of uncoated CF (sized with epoxy resin by the manufacturer), there is no adhesion between the fibres and the epoxy matrix (*Figure 1a*), whereas a strong interaction between the interlayer and the epoxy resin can be seen when coated fibres are used (*Figures 1b* and *1c*). This phenomenon confirms the necessity to replace the *IS* test by a more precise method for determination of the interlaminar properties of composite laminates. Of course, also the type of polymer used as interlayer has to be exchanged for a copolymer, the mechanical properties of which can be determined by the ratio of the comonomers.

Theoretical calculations have shown that the optimal modulus of the interlayer should be between the moduli of its glassy and flexible states[2]. When the modulus of the polymeric interlayer is lower than that of the matrix, crack formation and propagation in the composite are avoided owing to the conversion of the condensed mechanical energy into heat[3].

The maximal energy dispersion in polymers is near their glass transition temperature (T_g), which can be planned ahead by selecting a proper monomer composition in the polymerization solution.

In this work methyl acrylate (MA) and methyl methacrylate (MMA) were chosen as monomers for the preparation of the copolymeric interlayer by means of

---

* To whom correspondence should be addressed. Present address: Polytechnic University, Polymer Research Institute (Room 634), 333 Jay Street, Brooklyn, NY 11201, USA

0032-3861/92/081669-07

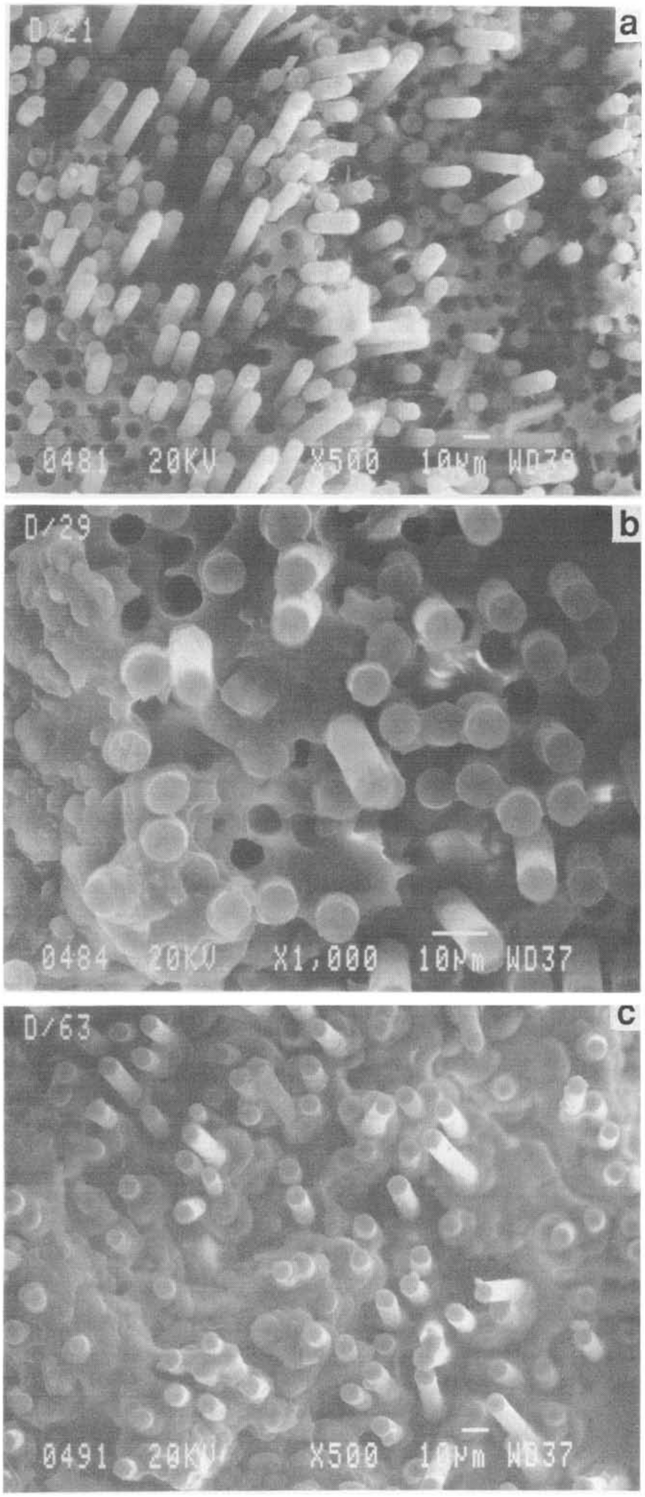

Figure 1 SEM micrographs of the fractured surface in the impact strength test of composite specimens: (a) epoxy-sized CF by manufacturer; (b) and (c) CF coated with PHPMA (15.8%) and PAn (4.9%, post-polymerization treated in alkaline solution), respectively

their electrochemical copolymerization on CF. The T_g values of PMA and PMMA are 279 and 378 K, respectively[4]; copolymers with any T_g in this temperature range can be synthesized.

EXPERIMENTAL

Materials and electrochemical set-up

Extra-high-strength polyacrylonitrile-based carbon fibres ACIF-XHT, in tows of 6000 filaments, were obtained from kibbutz Afiqim, Israel. The diameter of a single filament is 7 μm. The unsized fibres were obtained by extraction of CF (dip-coated with an epoxy resin by the manufacturer) in trichloroethane for 15 h followed by drying for 12 h at 70°C.

Methyl acrylate and methyl methacrylate, both from Fluka (Buchs, Switzerland), were purified by distillation under reduced pressure and kept cold.

The electrochemical polymerization was carried out in a three-compartment cell described in a previous paper[1]. The central chamber contained the monomer–electrolyte solution, the working electrode (namely, the CF, wrapped around a rectangular Teflon frame) and a saturated calomel electrode (SCE) as a reference. The two outer compartments contained only the electrolyte and carbon cloth, as a counter-electrode. They were separated from the central chamber by porous sinters on which a salt bridge was layered.

Preparative electropolymerization

The monomer–electrolyte solution was poured into the central (cathodic) chamber of the cell and stirred during the coating process. The CFs, wetted in distilled water and stretched on the Teflon frame, were introduced into the same compartment and coated under nitrogen in a controlled-current mode. During the reaction the total voltage, relative potential and current were monitored. At the end of the electrolysis, the CFs were removed from the solution, rinsed with distilled water and dried at 50°C to a constant weight (1 h). The weight gain, in per cent, was calculated as $100 \times (w_g - w_i)/w_i$, where w_i and w_g represent the weights of the initial and coated fibres, respectively.

The composition of MMA–MA copolymers with T_g in the range 313–353 K was calculated by the Fox relationship[5] rearranged as follows:

$$W_a = (T_{ga}/T_g) \times (T_{gb} - T_g)/(T_{gb} - T_{ga}) \qquad (1)$$

where W_a refers to the weight fraction of one of the monomers, MMA, and T_g, T_{ga} and T_{gb} refer respectively to the glass transition temperatures of the copolymer and the two corresponding homopolymers, PMMA and PMA.

The mole fractions in the monomer feed (f_a and f_b for MMA and MA, respectively) could be calculated using the Fineman–Ross equation[6], modified after simple arithmetic manipulations:

$$Af_a^2 + Bf_a - C = 0 \qquad (2)$$

where

$$A = r_a - 1 - F_a(r_a + r_b - 2)$$

$$B = 1 - 2F_a(1 - r_b)$$

$$C = F_a r_b$$

Here r_a and r_b are the reactivity ratios of MMA and MA, respectively, and F_a is the mole fraction of MMA in the copolymer and can be calculated from its weight fraction W_a.

In *Table 1* are given the calculated weight (W) and mole (F) fractions of the monomers in poly(MMA-*co*-MA), as copolymeric interlayers, with different T_g, as well as the mole fractions (f) in the monomer feed. The values of the reactivity ratios of MMA and MA used in the calculations were 0.3 and 1.5, respectively[4].

Table 1 The calculated weight and mole fractions of monomers in copolymers with different T_g and the corresponding mole fractions in feed[a]

No.	T_g (°C)	W		F		f	
		MMA	MA	MMA	MA	MMA	MA
1	40	0.42	0.58	0.38	0.62	0.55	0.45
2	50	0.52	0.48	0.48	0.52	0.67	0.33
3	60	0.62	0.38	0.58	0.42	0.77	0.23
4	70	0.71	0.29	0.68	0.32	0.85	0.15
5	80	0.80	0.20	0.78	0.22	0.91	0.09

[a] MMA, methyl methacrylate; MA, methyl acrylate; T_g, glass transition temperature; W and F, weight and mole fractions of the monomer in copolymer, respectively; f, mole fraction of the monomer in feed

Differential scanning calorimeter study

The electropolymerized copolymers were collected from the CF surface in a Soxhlet apparatus by continuous extraction with dichloromethane and afterwards precipitated with petroleum ether. A Mettler TA 3000 differential scanning calorimeter (d.s.c.) was used to determine the T_g of the copolymers. Samples of approximately 10 mg, sealed in aluminium pans, were heated at a rate of 10°C min^{-1} in a dry nitrogen environment (100 ml min^{-1} flow rate). The shift of the baselines corresponded to the T_g.

Scanning electron microscopy

The surface morphology of the polymer-coated fibres was followed by SEM on a JEOL JSM-1300 instrument at 25 kV.

Mechanical tests

Mode I delamination test. Linear elastic fracture mechanics is used when studying the interlaminar fracture toughness of composites. It characterizes the behaviour of linear elastic materials having an internal crack. The parameter in the energy balance approach, which is used as a crack propagation criterion, is the strain energy release rate[7] G. Different techniques have been used to measure and calculate the critical interlaminar G in the opening failure mode (mode I)[8]. One of the most common specimens is the double cantilever beam, distinguished by the simplicity of the theoretical analysis[8,9]. The configuration of the specimen is presented in *Figure 2*. The defect is introduced during moulding by a thin non-adhesive spacer.

The compliance method is used for the determination of the mode I strain energy release rate[10]:

$$G_{Ic} = \frac{P_c^2}{2W}\frac{dC}{da}$$

where P_c is the critical load of delamination, C is the compliance, W is the width of the specimen and a is the length of the defect. The compliance is given by the ratio of displacement to load, $C = \delta/P$.

It is suggested that $\delta = Pa^n h^{-1}$. Consequently, $C = a^n h^{-1}$, where n and h are constants typical of the type and form of reinforcement and are defined by the straight line described by the equation:

$$\lg C = n \lg a - \lg h \qquad (3)$$

Since $dC = h^{-1} n a^{n-1}\, da$ and $a = (\delta h/P)^{1/n}$, then:

$$G_{Ic} = \frac{n}{2Wh^{1/n}}(P^{n+1}\delta^{n-1})^{1/n} \qquad (4)$$

The composite specimens were tested with 'T'-type load tabs as shown in *Figure 2*. The tabs were glued to the samples with cyanoacrylate adhesive. Before the test, the edges of the specimens were painted with a white coating and marked at 5 mm increments to aid in crack observation. The crack length a was evaluated from the loading line.

The specimens were then mounted in the grips of a table Instron model 1026 tensile tester; the selected testing speed was 2 mm min^{-1}. The first load application was continued until the crack extended 5, 10, 15 and 20 mm. These values were marked at the corresponding point on the chart for later identification. The machine was stopped, the displacement returned to zero, and then the process was repeated until the crack reached 40 mm. Visual observations were made with a magnifying glass. The values n and h were determined from the slope and intercept of the straight line, obtained by plotting $\lg(\delta/P)$ vs. $\lg a$ and calculation of the best least-squares fitted line. Three determination tests were performed for each sample.

Interlaminar shear strength (ILSS)[11]. The specimen (15 mm × 10 mm) was aligned on a three-point load test jig with a span/depth ratio of 5:1, in a table Instron. The loading nose and support had a diameter of 6.36 mm; the span width was 10 mm. The specimen was loaded at a speed of 1 mm min^{-1}; the load at which failure occurred was recorded and the mode of failure was noted. The *ILSS* was calculated as the mean of four determinations, according to the equation $ILSS = 0.75P/Wt$, where P is the load at which failure occurs (kg) and W and t are respectively the width and thickness of the specimen (mm).

Preparation of the composite specimens. The specimens for mechanical tests were prepared in an open-ended mould. Layers made up of five tows were soaked in an epoxy resin mixture, prepared from DER-330 (Dow Chemical), Tonox 60/40 (Uniroyal) and RD-2 (Ciba Products) as diluter, at a ratio of 100:25:28, placed in the inner part of the mould and stretched along it axis. Together with the fibres, spacers 0.75 μm thick were

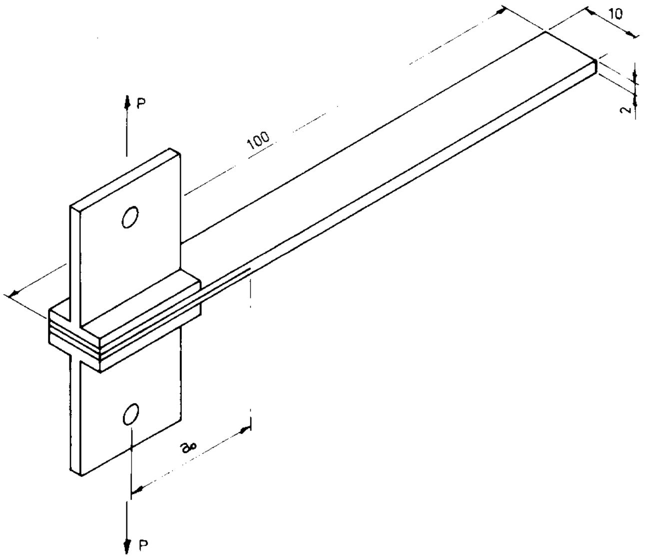

Figure 2 The specimen configuration for mode I delamination tests

introduced into both sides of the mould to form the defect during moulding (*Figure 2*). The pressed mould was subjected to two curing steps: 3 h at 80°C and 4 h at 140°C.

The CF content in the composite specimens was determined by conventional thermogravimetric analysis (t.g.a.) and confirmed by the weighing method. T.g.a. was carried out by means of a Du Pont 951 Thermogravimetric Module connected to a Du Pont 990 Thermal Analyzer. The device measures the weight and rate of weight change of a material continuously as a function of temperature. The samples were heated to 550°C at a rate of 20°C min^{-1} under nitrogen, introduced at a flow rate of 50 ml min^{-1}. Under these conditions the weight of the CF remained unchanged throughout the analysis. Preliminary experiments, in which only the epoxy resin was tested, revealed that its decomposition is incomplete: 18.3% of the epoxy resin remained as char. Hence, the t.g.a. results should be corrected accordingly.

RESULTS AND DISCUSSION

Electrocopolymerization of methyl acrylate and methyl methacrylate

In feasibility experiments, the electrocopolymerization of MMA and MA was carried out in a solution of 3% monomers (at a ratio according to No. 3 in *Table 1*) in ethanol/distilled water (1:3.5 by volume) with 0.05–0.1 M sulphuric acid as electrolyte. The current density and reaction time were 1–3 mA cm^{-1} and 50–70 min, respectively.

The morphology and the micro-level homogeneity of the coating were examined by SEM. *Figure 3a* indicates the texture of an uncoated fibre: the surface is smooth but wavy. The micrographs of the coated fibres (*Figures 3b* and *3c*) show that upon polymerization structures are formed that resemble the wavy texture of the uncoated fibres (*Figure 3a*). However, at low weight gains (*Figure 3b*) the texture is drop-shaped and uneven, with the polymer drops arranged along the fibre axis. Micrographs at lower magnification show that the morphology of all adjacent fibres is similar. At relatively high weight gains (~20%) the upper copolymer layer is also uneven and looks like it is torn off (*Figure 3c*). It should also be noticed that the working solution becomes turbid after one or two runs and the copolymerization rate, calculated per unit of current density, was low (0.28% cm min^{-1} mA^{-1}).

To improve the surface texture of the coating, increase the copolymerization rate and stabilize the electropolymerization process, the composition of the monomer–electrolyte solution was changed. A solution of 15% monomer in ethanol in the presence of 1.7 M H_2SO_4 and 1.1 M H_2O was used, to which 0–7% hydroquinone monomethyl ether (HQME) as inhibitor was added. The mole fractions of MMA and MA used were like No. 3 in *Table 1*.

In the absence of HQME, after 30 min reaction, a weight gain of 34.5% was obtained, but homopolymerization occurred. Addition of 3, 5 and 7% of HQME allowed us to perform 5, 10 and 24 runs, respectively. SEM investigations showed that coatings received at current densities higher than 0.75–1.0 mA cm^{-1} were uneven and in some cases delamination occurred. High current densities also impair the monomer solution stability. These negative occurrences take place owing to the increase in the amount of hydrogen in the nascent state and, especially, hydrogen evolution from the CF during the reaction[1,12], the rate of which depends on the applied current. Therefore, low currents and higher reaction duration are recommended for a smooth run of the coating process.

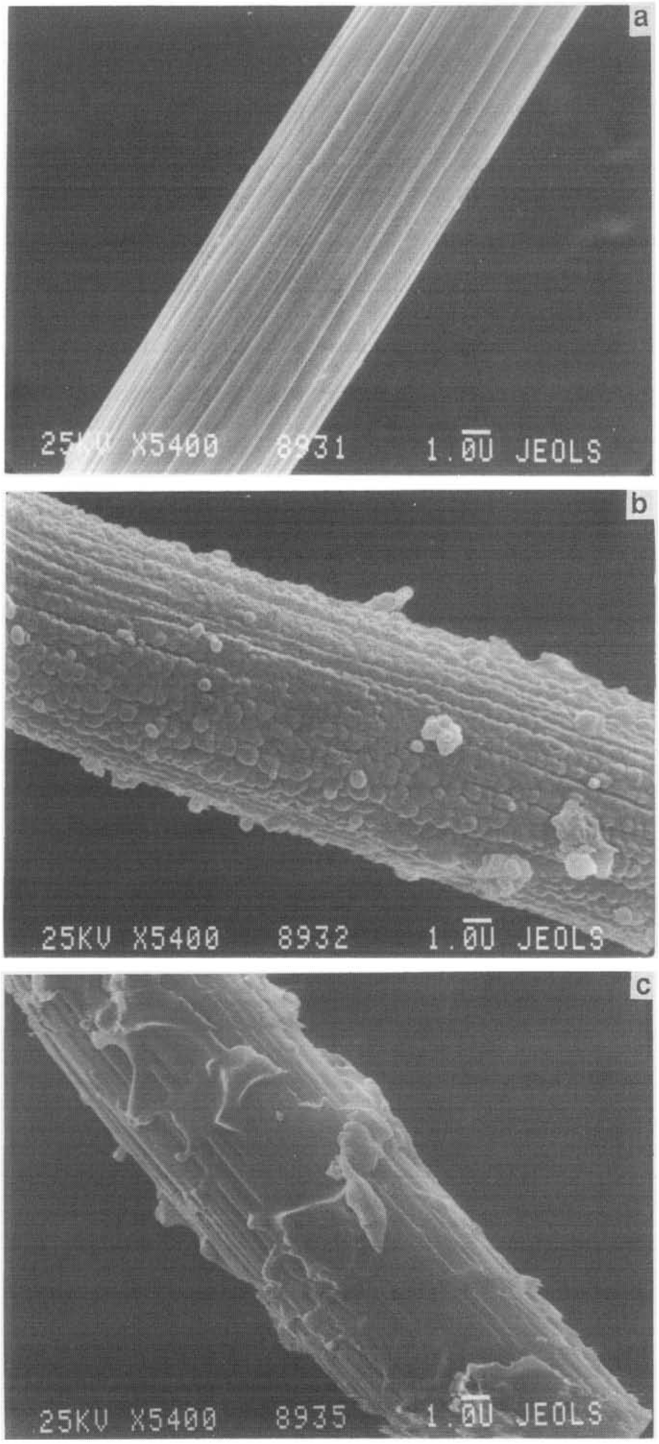

Figure 3 SEM micrographs of poly(MMA-*co*-MA) coatings on CF: (a) uncoated fibre; fibres coated with (b) 10.8% and (c) 19.8% of copolymer with $T_g = 60$°C (expected). Electrolyte solution, ethanol/0.05 M H_2SO_4 in water (1:3.5, by volume); current density 1 mA cm^{-1}; polymerization time, 50 and 70 min for 10.8 and 18.8% weight gains, respectively

In *Table 2* some examples of CF coating preparation with expected T_g values of 60 (No. 3) and 80°C (No. 5) are given. It is seen that the copolymerization rate per

Table 2 Influence of current density on reaction time at constant weight gain

Monomer composition[a]	Current density (mA cm^{-1})	Reaction time (min)	WG (%)	Copolymerization rate	
				WG min^{-1}	(WG min^{-1})/(mA cm^{-1})
No. 3	0.30	35	13.7	0.39	1.30
	0.75	23	14.7	0.64	0.85
	1.25	13	14.4	1.11	0.89
No. 5	0.75	25	12.7	0.51	0.68
	1.00	23	12.0	0.52	0.52
	1.25	20	12.0	0.60	0.48

[a] See *Table 1*
[b] *WG*, weight gain

Table 3 Conditions at which copolymers were electropolymerized for T_g (glass transition temperature) determination

Monomer composition[a]	T_g (°C)		Current density (mA cm^{-1})	Reaction time (min)	WG[b] (%)	Copolymerization rate	
	Expected	Obtained				WG min^{-1}	(WG min^{-1})/(mA cm^{-1})
MA	6	4.2	0.6	90	260	2.89	4.81
No. 1	40	44.6	0.6	120	200	1.67	2.78
No. 2	50	55.5	0.6	122	122	1.00	1.67
No. 3	60	64.4	0.6	90	54	0.60	1.00
No. 4	70	74.5	0.6	120	73	0.61	1.01
No. 5	80	82.0	0.6	120	80	0.67	1.11
MMA	105	105.6	0.8	120	70	0.58	0.73

[a] See *Table 1*
[b] *WG*, weight gain

unit of current density, in the range of 0.75–1.25 mA cm^{-1}, is almost constant. The rate is higher for a composition that contains less MMA (compare No. 3 and 5, with monomer ratios MMA:MA in the feed of 3.35 and 10.11, respectively). At current densities lower than 0.75 mA cm^{-1} the reaction effciency is the highest. This phenomenon can be explained by the lower hydrogen evolution near the CF, which disturbs the contact of the fibre surface with molecules of the monomers in the solution.

The correlation between the T_g of the electropolymerized copolymer (or, alternatively, between the mole fractions of the monomers in the copolymer) and the monomers in the feed is valid only if the reactivity ratios of MMA and MA used, which were reported for a peroxide-initiated process, are applicable to the electrochemical reaction. The determination of the content of monomers in the synthesized copolymers is difficult because of their similar chemical structure. Satisfactory results by calculation of the reactivity ratios can be obtained using the d.s.c.-determined T_g of the synthesized copolymers, equation (1), and the rearranged copolymer equation (2)[13]:

$$\frac{f_a(1-2F_a)}{(1-f_a)F_a} = r_b + \frac{f_a^2(F_a-1)}{(1-f_a)^2F_a}r_a \qquad (5)$$

For T_g determinations, copolymers at feed ratios calculated according to T_g equal to 40, 50, 60, 70 and 80°C were electrosynthesized (see *Table 1*). An electrolyte solution with a monomer content of 15% was used (see earlier in this subsection). The conversions were not allowed to be higher than 4–5%. Other parameters of the reactions are given in *Table 3*. The data from this table confirm clearly that the copolymerization rate decreases with growth of the MMA part in the monomer composition. A small difference between the expected and d.s.c.-determined T_g values was observed.

Table 4 The copolymer equations for the electropolymerized copolymers[a]

T_g (°C)	W_a	F_a	f_a	Copolymer equation
82.0	0.817	0.794	0.908	$-7.306 = r_b - 25.303r_a$
74.5	0.753	0.723	0.850	$-3.500 = r_b - 12.278r_a$
64.4	0.661	0.626	0.773	$-1.373 = r_b - 6.919r_a$
55.5	0.575	0.538	0.670	$-0.288 = r_b - 3.552r_a$
44.6	0.464	0.427	0.550	$0.420 = r_b - 2.007r_a$

[a] T_g, glass transition temperature; W_a, weight fraction of MMA in the copolymer, calculated from the d.s.c.-determined T_g; F_a, mole fraction of MMA in the copolymer; f_a, mole fraction of MMA in the monomer feed; r_a and r_b, reactivity ratios of MMA and MA, respectively

Table 4 gives the calculated weight fractions W_a (from the determined T_g values) and mole fractions F_a of MMA in the copolymers, as well as the copolymer equations for the synthesized polymers. These equations give straight lines with slope r_a and intercept r_b. As shown in *Figure 4*, the reactivity ratios can be determined by the least-squares regression of the experimental data presented in *Table 4*. The r_a and r_b values calculated from the slope and intercept of the line are 0.33 and 0.89, respectively. These values are somewhat different from those obtained from previous measurements carried out in a peroxide-initiated polymerization process (see above), and might

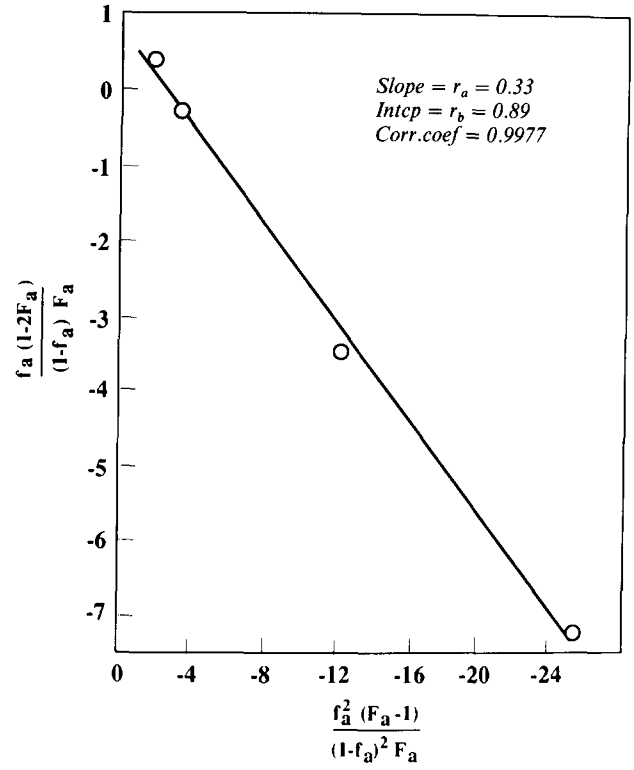

Figure 4 Determination of monomer reactivity ratios in electroinitiated copolymerization of MMA and MA

be attributed to an inherent difference associated with electroinitiation, or to the different medium used.

Mechnical tests

Specimens of composite materials for mechanical tests were prepared from CF, coated in a cell with one-litre central chamber. The monomer ratio in the feed was according to No. 3 and 5 (*Table 1*), which produce copolymers with $T_g = 64$ and 82°C, respectively (*Table 3*).

Before moulding, some of the coated CF underwent SEM examinations (*Figure 5*). The micrograph of the coated fibre (*Figure 5a*) shows that there is almost no difference between its structure and that of the virgin CF (*Figure 3a*). The morphology of the adjacent fibres (*Figure 5b*) is similar and shows that the surface of the coatings performed under the new conditions are even, and repeat exactly the wavy structure of the uncoated CF. Also a twofold thicker layer (450 nm), as presented in *Figure 5c*, does not disturb the evenness of the surface.

The compliance calibrations, executed according to equation (3), exhibited excellent correlations in tests, as shown in *Table 5*. The major parameters, the effects of which were investigated in the present study, were the composition of the coating and its thickness. *Table 5* presents the average *G* values of three tests, for fibre contents of 60 ± 0.5%. In general the values show that all composites prepared from coated CF, independently of the T_g of the layer and its thickness, demonstrate higher G_{Ic} (40–196%) and *ILSS* (7–20%) than that of the specimens from untreated CF. The ductility of the coatings influences the composite's G_{Ic}. Hence, the G_{Ic} of composites Nos. 2–4 (*Table 5*) is higher than that of specimens Nos. 5–8, which differ from the former in T_g. The strain energy release rate depends also on the thickness of the layers (compare Nos. 2, 3 and 4 in *Table 5*), and the trend is higher G_{Ic} values at thinner coatings. The same trend is observed in the *ILSS* tests, which confirm the assumption that G_{Ic} is also a measure of the fibre matrix bond strength. It should be noted that the mode of failure of all specimens tested for *ILSS* was 'compression'.

The kinetics of damage growth in a constant-crosshead-speed experiment (0.2 cm min^{-1}) is shown in *Figure 6*.

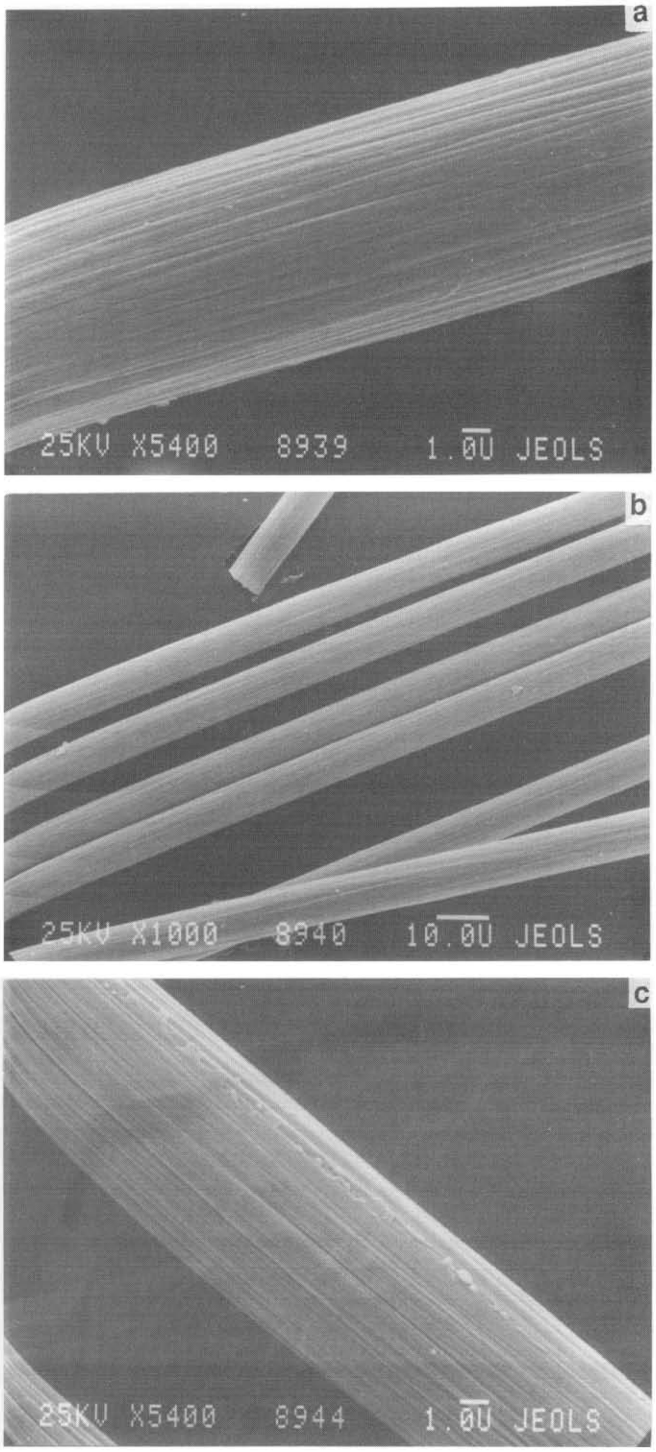

Figure 5 SEM micrographs of poly(MMA-*co*-MA) coatings on CF: (a) and (b) fibres coated with 9% of copolymer; (c) fibre coated with 18% of copolymer. Monomer–electrolyte solution, 15% monomers in ethanol with 1.7 M H_2SO_4 and 1.2 M H_2O; current density 0.2 mA cm^{-1}; T_g of the coatings, 64°C

Table 5 Strain energy release rate (G_{Ic}) and interlaminar shear strength (*ILSS*) of composites prepared with poly(MMA-*co*-MA) coated and uncoated carbon fibres[a]

No.	T_g copolymer layer (°C)	*WG* (%)	Layer thickness (calculated) (nm)	Correlation coefficient, *r*	*n*	*h*	Strain energy release rate: G_{Ic} (J m^{-2})	Strain energy release rate: ΔG_{Ic} (%)	Interlaminar shear strength: *ILSS* (N m^{-2} x 10^7)	Interlaminar shear strength: Δ*ILSS* (%)
1	–	–	–	0.996	2.359	1.945	429 ± 50	–	7.0 ± 0.3	–
2	64	10.8	270	0.997	2.207	0.723	1270 ± 114	196	7.9 ± 0.1	13
3		13.2	330	0.994	2.215	0.708	1000 ± 138	133	8.3 ± 0.5	19
4		17.3	430	0.998	2.398	1.260	612 ± 64	43	8.0 ± 0.4	14
5	82	11.1	280	0.997	2.399	1.318	640 ± 67	49	8.2 ± 0.2	17
6		13.2	330	0.997	2.274	0.934	994 ± 146	132	7.9 ± 0.0	13
7		14.9	370	0.995	2.408	1.326	600 ± 86	40	7.7 ± 0.3	10
8		16.9	420	0.997	2.379	1.339	608 ± 65	42	7.5 ± 0.2	7

[a] T_g, glass transition temperature; *WG*, weight gain; *n* and *h*, constants; the *ILSS* value of No. 6 represents the mean of two determinations

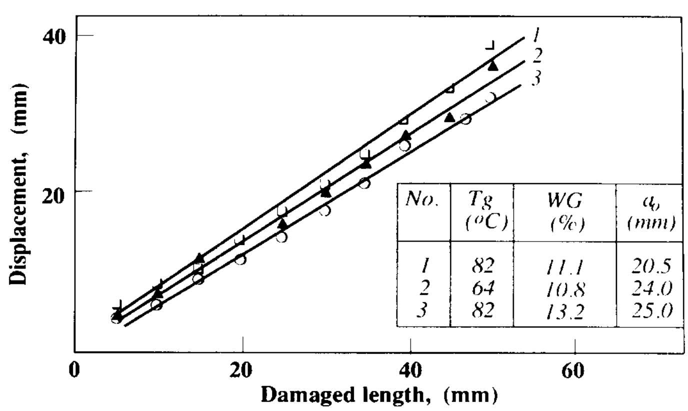

Figure 6 Propagation of damaged length in mode I delamination tests

The tested specimens contain CF, coated with copolymers of different T_g and almost identical weight gain *WG*. They also differ slightly in the length of the introduced defect a_0. The delamination tests show stable crack propagation with a constant rate, which depends on the length of the initially introduced defect (compare lines 1 and 3 in *Figure 6*).

CONCLUSIONS

The electrochemical polymerization technique was used to form a polymeric layer of poly(MMA-*co*-MA) on the CF surface. The increase of the monomer and electrolyte concentrations in the working solution raised the copolymerization rate by a factor of 2.5–3.0. Reduction of the current density to 0.1–0.3 mA cm^{-1}, in addition to the above-mentioned changes in the monomer–electrolyte composition, led to the formation of thin (240–420 nm) and even coatings of high quality.

The reactivity ratios of MMA and MA were calculated from the T_g values of the electropolymerized copolymers, and found to be equal to 0.33 and 0.89, respectively. These values are somewhat different from data reported in the literature for free-radical polymerization.

Mode I delamination tests were performed on composite material specimens. They contained CF coated with the copolymer, which serves as an interlayer at the fibre/epoxy matrix interface. The calculated strain energy release rate from the test data has shown an improvement of 40–200% for coatings of poly(MMA-*co*-MA) in comparison with specimens from untreated CF. The electrocoating with the above-mentioned copolymer also increased the *ILSS* by a factor of 1.2.

ACKNOWLEDGEMENTS

This work was supported by the Israel–European Community Science Foundation. The technical assistance of Mrs Carmela Barash is acknowledged.

REFERENCES

1 Zinger, B., Shkolnik, S. and Hoecker, H. *Polymer* 1989, **30**, 628
2 Broutman, L. J. and Agarwal, B. D. *Polym. Eng. Sci.* 1974, **14**, 581
3 Kardos, J. L. paper presented at PIA short course on 'Short Fibre Polymer Composite System', 29 June 1979; Tryson, L. D. and Kardos, J. L., 'Preprints 36th Annu. Conf., Reinforced Plast./Compos. Institute', SPI, Section 2-E, 1981, p. 1; Kardos, J. L. *Polym. Prepr.* 1983, **4**(1), 185
4 Brandrup, J. and Immergut, E. H. (Eds.) 'Polymer Handbook', Wiley, New York, 1966
5 Fox, T. G. *Bull. Am. Phys. Soc.* 1956, **1**, 123
6 Fineman, M. and Ross, S. D. *J. Polym. Sci.* 1950, **5**(2), 259
7 Kinloch, A. J. and Young, R. J. 'Fracture Behaviour of Polymers', Applied Science, London, 1983
8 Rosensaft, M. and Marom, G. *J. Compos. Technol. Res.* 1988, **10**(3), 114
9 Marom, G., Roman, I., Harel, H., Rosensaft, M., Kenig, S. and Moshonov, A. *Int. J. Adhes. Adhes.* 1988, **8**(2), 85
10 De Charentenay, F. X., Harry, J. M., Prel, Y. J. and Benzeggagh, 'ASTM STP836', American Society for Testing and Materials, USA, 1984, p. 84
11 *ILSS* in 'GRAFIL test methods', Section 4, Test Reference 406.13, Courtaults Ltd, Carbon Fibres Division, PO Box 16, Coventry CV6 5AE, UK
12 Chang, J., Bell, J. P. and Shkolnik, S. *J. Appl. Polym. Sci.* 1987, **34**, 2105
13 Billmeyer, F. W. Jr 'Textbook of Polymer Science', Wiley International, Japan, 1971, p. 334